Barber Electronics Gain-Changer

www.barberelectronics.com
12-6-2012

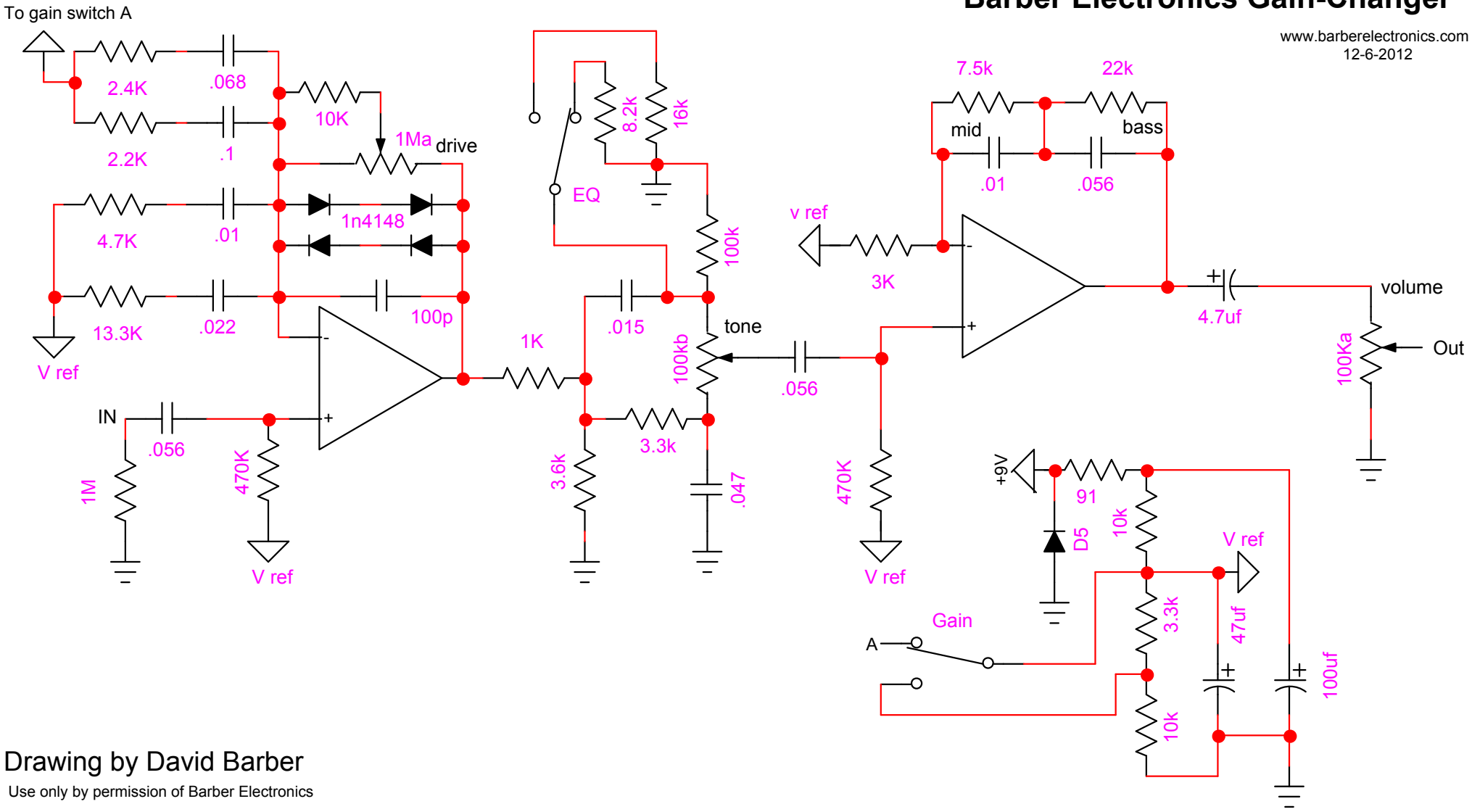

Drawing by David Barber

Use only by permission of Barber Electronics

© Barber Electronics